Gatsby modular

by Ramón Esteve

The Gatsby collection, designed by Ramón Esteve for Vondom, recalls the Art Déco lighting. Those crazy twenties. “Something new, extraordinary, beautiful, simple but sophisticatedly designed” said Francis Scott Fitzgerald about his aims for the novel he was about to write. The Great Gatsby was born in an age of prosperity, parties and excess. They called it “the American Dream”.



Info

Description

Made of polyethylene resin by rotational moulding. 100% Recyclable. Item suitable for indoor and outdoor use. Available in different finishes.

Modules

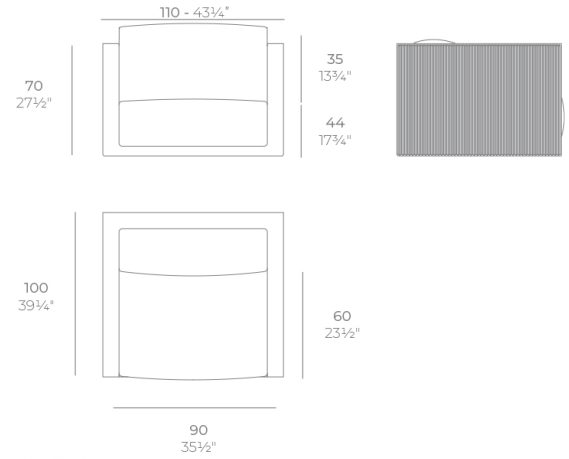

GATSBY Butaca
GATSBY Armchair
ref. 54403

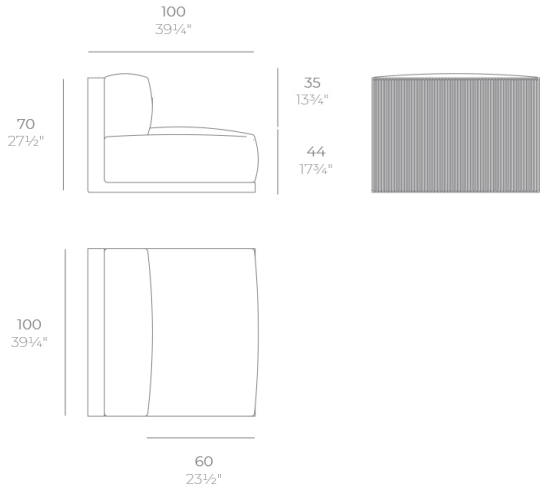

GATSBY Sofá Módulo Central
GATSBY Sectional Sofa Armless
ref. 54404

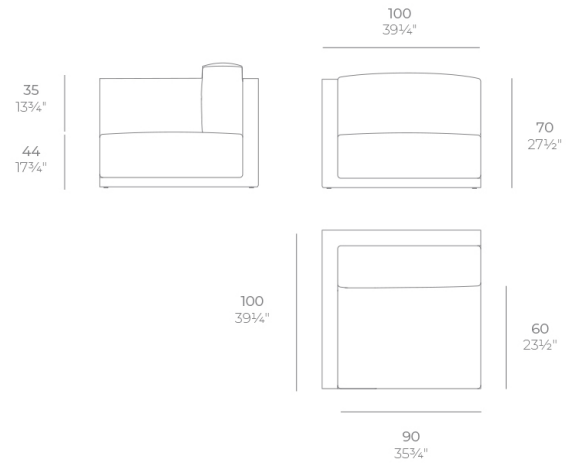

GATSBY Sofá Módulo Derecho
GATSBY Sectional Sofa Right
ref. 54405

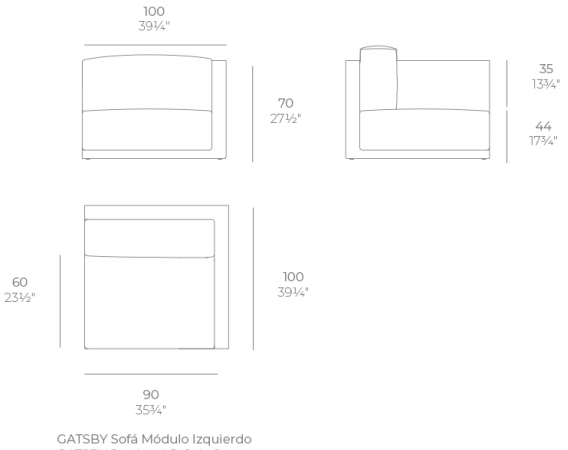

GATSBY Sofá Módulo Izquierdo
GATSBY Sectional Sofa Left
ref. 54406

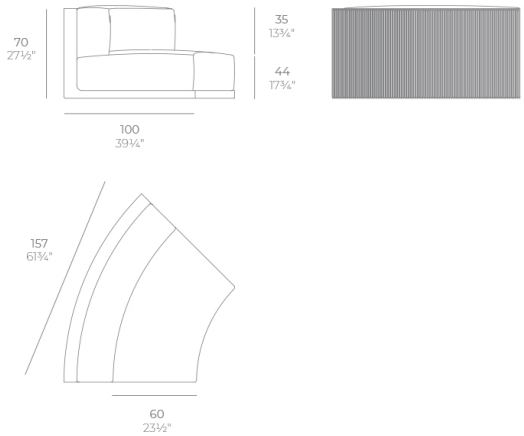

GATSBY Sofá Módulo Circular 45°
GATSBY Sectional Sofa Curved 45°
ref. 54407

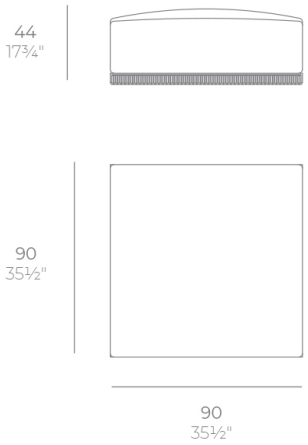

GATSBY Puff-Chaise Longue
GATSBY Ottoman-Chaise Longue
ref. 54408

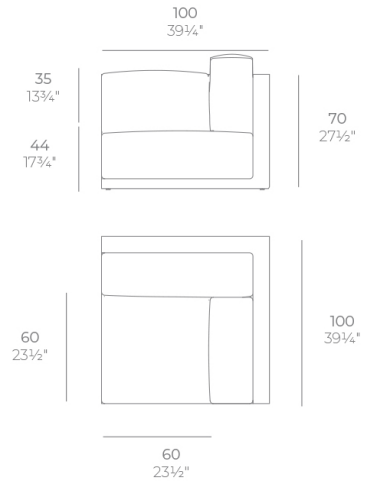

GATSBY Sofá Módulo Esquina Izquierda
GATSBY Sectional Sofa Left Corner
ref. 54411

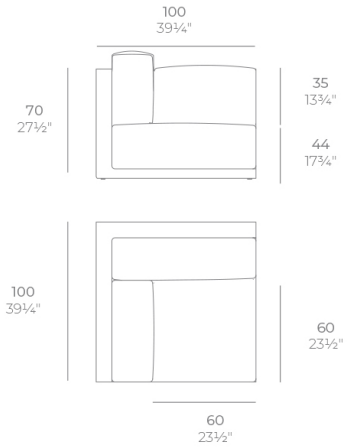

GATSBY Sofá Módulo Esquina Derecha
GATSBY Sectional Right Corner
ref. 54420

Finishes

finishes

BASIC

crema

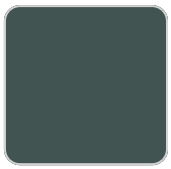
green

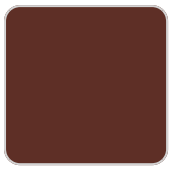
purjai red


orange

ice


notte blue

white


black


bronze


steel


anthracite


red


khaki


taupe


ecru


beige

Matt Polyethylene

fabric

GLAD


oro 1031


ocre 1051


sunset 1020


delhi 1038

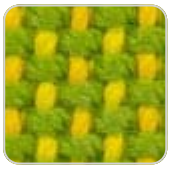
lima 1030


aguacate 1028

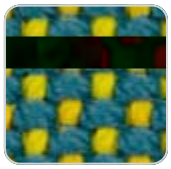
caribe 1004


bosc 1029


artemisa 1027


oasis 1007


oceano 1005


pruna 1045


noa 1026


berry 1021


amatista 1011


vera 1019


afrodita 1013


grana 1046


bacco 1034


dahlia 1035


wine 1012


foc 1052

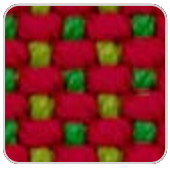
hestia 1014


turquoise 1053


niord 1015


masai 1018


ultramar 1002


aquamarina 1003


esmeralda 1016


night 1024


galan 1025


eclipse 1023


perla 1006


calipso 1017

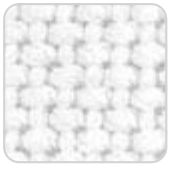
snow 1041

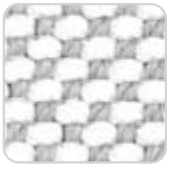
iceberg 1037

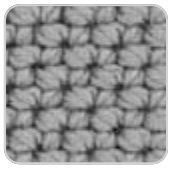
steel 1042


moon 1040


granito 1008

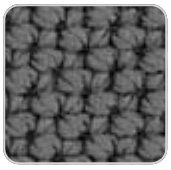
grey 1043


antrhacite 1044


ecru 1047


dessert 1033


taupe 1048


terra 1039


duna 1009


moka 1010


chocolate 1050

Soft and cozy fabric suitable for indoor and outdoor use.

VARM

Soft and cozy fabric suitable for indoor and outdoor use.

HYGGE

Soft and cozy fabric suitable for indoor and outdoor use.

NAUTIC


notte blue 1114

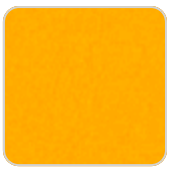
orange 3115

taupe 1102

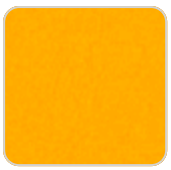
orange 1113


bronze 1104

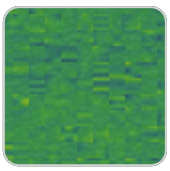
forest 1112

white 1100

natural 1111

crema 1103

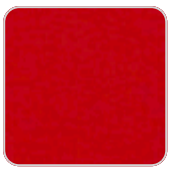
red 1108


steel 1101


purjai red 1106


black 1105

Soft leather like fabric suitable for indoor and outdoor use. Stantard option for upholstery.

SILVERTEX


forest 1224


beige 1211


bronze 1214


khaki 1218


steel 1208


plum 2016

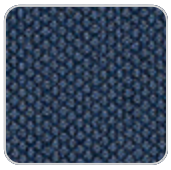
navy 3068


taupe 1209

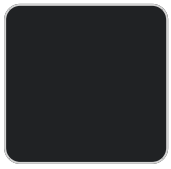
antrachite 1210

Vinyl fabric suitable for indoor and outdoor use. Special option for upholstery.

CREVIN


white 1308


steel 1309


taupe 1310


anthracite 1311

Upholstery fabric, that as and natural appearance and can be easy cleaned by washing machines, allowing an easy removal of mildew. Suitable for indoor and outdoor use

CICO

Cozy fabric with an elegant look and soft touch.

ACAPULCO

Cozy fabric with an elegant look and soft touch.

SIESTA

Cozy fabric with an elegant look and soft touch.

IKON

Cozy fabric with an elegant look and soft touch.

KROLLET

Soft and cozy fabric suitable for indoor and outdoor use.

HERITAGE



granite 1531

Outdoor fabrics are waterproof 50% recycled acrylic, 47% acrylic and 3% PE.

SAVANE



tornado 1503



whisper 1502



white 1501

Outdoor fabrics are waterproof 100% acrylic.